CALC

槓桿式氣壓缸

CALC PNEUMATIC LEVERAGE CLAMP

產品特性

此型式氣壓缸，採用標準規格化治具缸，加裝槓桿式夾持機構，活塞推出為夾緊狀態，主要機構零件安裝於缸體外部，易於維護。缸體材質採用鋁合金，內壁表面光滑，具耐磨性，使用壽命長，夾持機構材料均採用機械構造用碳素鋼，堅固耐用。
本系列各種型號均可安裝磁性感應開關。

FEATURES

The CALC series is a type of pneumatic cylinder that uses a standard lever-type clamping mechanism based on the principle of leverage. When the piston is pushed out, the pneumatic cylinder is in its clamped state. The main component parts are installed externally, which is optimal for product maintenance. The cylinder body is made with aluminum alloy for anti-abrasion, whereas the mechanical components are made with carbon steel to enhance durability and product lifespan. Options to include magnetic induction switches are available amongst various models, please contact us for more information.

剖面圖 Sectional view

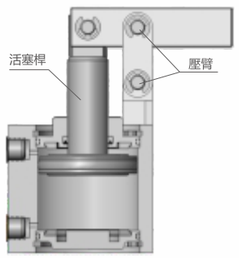

最大操作壓力：7 kgf/cm²
最小操作壓力：3 kgf/cm²
作動方式：複動式

Max. operating pressure: 7 kgf/cm²
Min. operating pressure: 3 kgf/cm²
Double acting

注意事項

夾緊及放鬆作動速度需適當放緩。

NOTE

The speed of clamping and unclamping action needs to be slowed down appropriately.

訂購標示法 ORDERING INDICATION

示例：CALC-MS32-S1

CALC	系列 Series	CALC
MS	空白：Blank MS	標準型 Standard type 附磁石感應 With magnetic induction
32	氣缸內徑 Cylinder inside diameter	Φ25 , Φ32 , Φ40 , Φ50 , Φ63 , Φ80 , Φ100
S1	感應開關 Sensor switch	S1：1個 S1:1 pc of S1 S2：2個 S2:2 pcs of S2

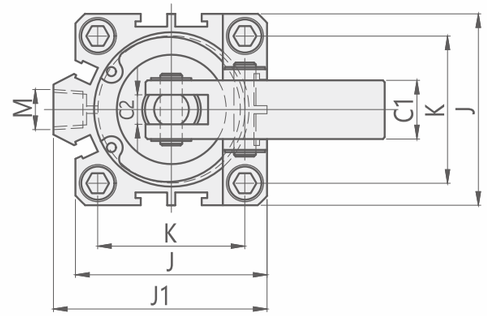

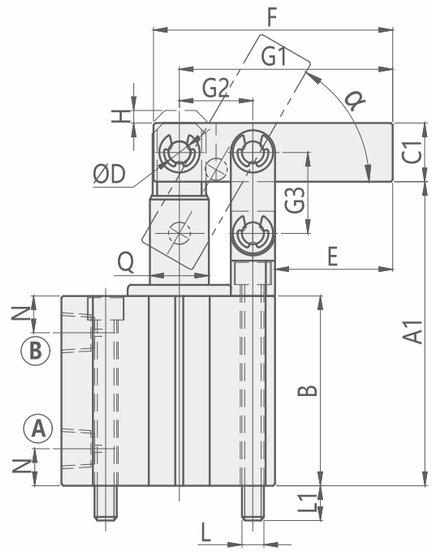

Ⓐ夾持氣孔 Clamping port
Ⓑ放鬆氣孔 Unclamping port

Unit:mm

型號 Model		CALC-25	CALC-32	CALC-40	CALC-50	CALC-63	CALC-80	CALC-100
標準型 Standard type	A1	65.5	78	82.5	96.6	115.5	138	163.5
	B	41	49	51.5	58.6	72.5	84	99
附磁石型 With magnet	A1	75.5	93	97.5	106.6	125.5	148	173.5
	B	51	64	66.5	68.6	82.5	94	109
C1		□13	□16	□16	□19	□22	□22	□25
C2		6	8	8	10	10	10	12
ΦD		Φ5	Φ6	Φ6	Φ8	Φ8	Φ10	Φ12
E		25	31	32	35	38.5	47	53
F		50	60	65	75	85	105	125
G1		45	53	58	66	76	94	110
G2		14	17	20	23	29.5	37	45
G3		17	20	22	27	32	40	45
H		3	3	3	3	3	3	3
J		40	44	52	62	75	94	114
J1		–	50	58	71	84.5	104	124
K		28	34	40	48	60	74	90
L		M5X0.8	M5X0.8	M6X1.0	M6X1.0	M6X1.0	M8	M10
L1		10.5	11	9.5	11	11	15.5	15
M		M5X0.8	PT1/8	PT1/8	PT1/4	PT1/4	PT1/4	PT1/4
N		8	9	10	11	11	14	18
α		75°	70°	65°	70°	65°	65°	60°
Q		Φ10	Φ12	Φ16	Φ20	Φ20	Φ25	Φ32

規格參數表 SPECIFICATIONS

型號 MODEL	理論夾持力 (7kgf/cm²) CLAMPING FORCE AT 7kgf/cm² (kgf)	夾緊行程 CLAMPING STROKE (mm)	總行程 TOTAL STROKE(mm)	推出容積 EFF.PISTON CAPACITY CLAMP(cm³)	拉入容積 CYLINDER CAPACITY UNCLAMP(cm³)	推出受壓面積 EFF.PISTON AREA CLAMP(cm²)	拉入受壓面積 EFF.PISTON AREA UNCLAMP(cm²)	使用溫度範圍 RANGE OF TEMPERATURE(°C)	使用流體 USABLE FLUID
CALC-25	20	17	20	9.82	8.24	4.91	4.12	-10~+60°C	過濾之乾燥壓縮空氣 Filtered dry compressed air
CALC-32	31	20	23	18.49	15.89	8.04	6.91	-10~+60°C	
CALC-40	56	22	25	31.40	26.40	12.57	10.56	-10~+60°C	
CALC-50	91	27	30	58.89	49.47	19.63	16.49	-10~+60°C	
CALC-63	169	32	35	109.06	98.00	31.16	28	-10~+60°C	
CALC-80	279	40	43	216.03	195.22	50.24	45.4	-10~+60°C	
CALC-100	469	45	48	376.80	338.4	78.5	70.5	-10~+60°C	